EXPLODED VIEW

IMPORTANT SAFETY NOTICE

Many electrical and mechanical parts in this chassis have special safety-related characteristics. These parts are identified by ⚠ in the EXPLODED VIEW.
It is essential that these special safety parts should be replaced with the same components as recommended in this manual to prevent Shock, Fire, or other Hazards.
Do not modify the original design without permission of manufacturer.

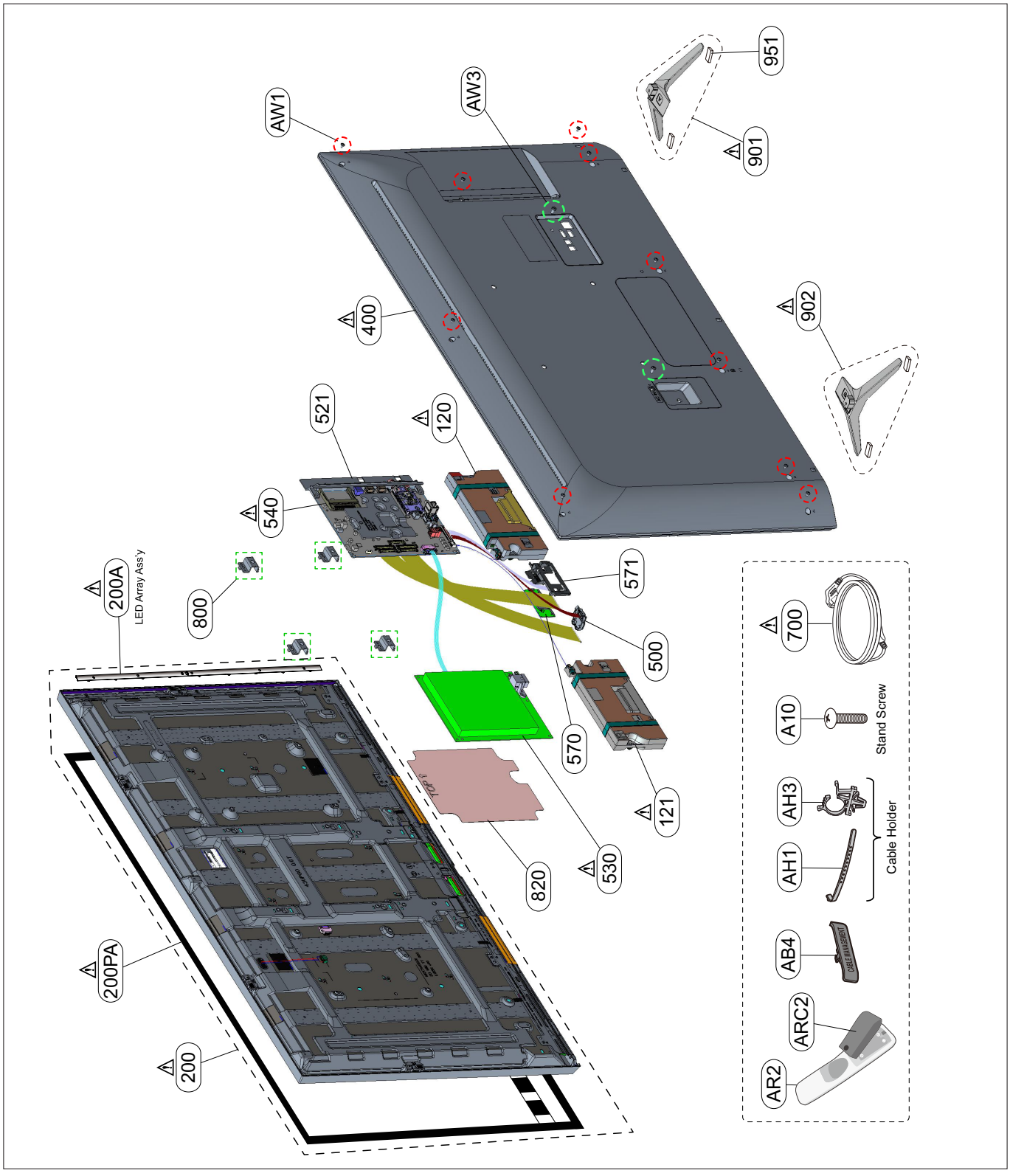

Copyright © 2024 LG Electronics Inc. All rights reserved.
Only for training and service purposes.

WIRING DIAGRAM

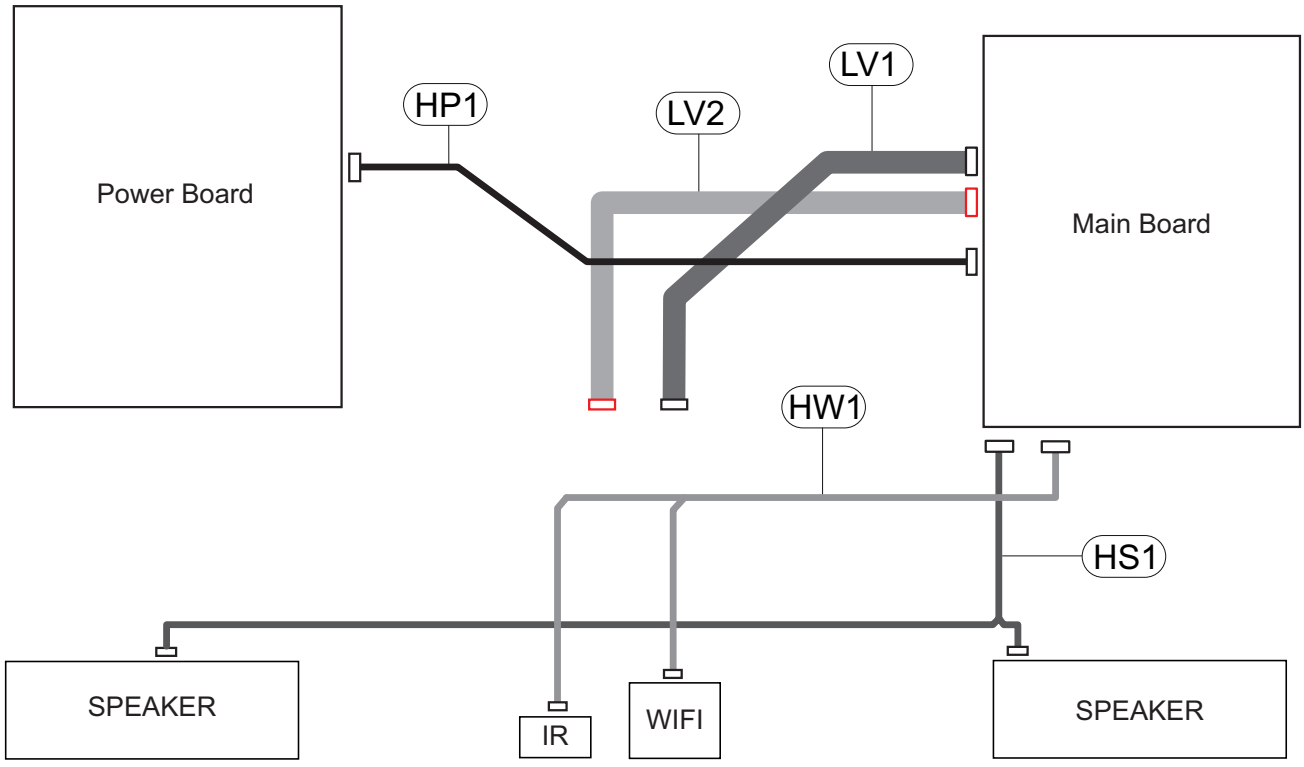

HP1

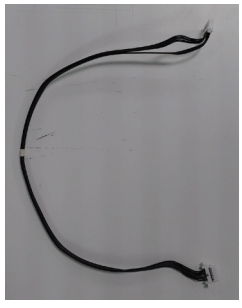

HW1

LV1

LV2

HS1

Copyright © 2024 LG Electronics Inc. All rights reserved.
Only for training and service purposes.